ORDER INFORMATION AND DIMENSION:

Circuits	Part No. (Black color, T/P)	Dimension A	Dimension B
2	2571P0203T	2.54	7.60
3	2571P0303T	5.08	10.12
4	2571P0403T	7.62	12.66
5	2571P0503T	10.16	15.20
6	2571P0603T	12.70	17.74
7	2571P0703T	15.24	20.28
8	2571P0803T	17.78	22.82
9	2571P0903T	20.32	25.36
10	2571P1003T	22.86	27.90
11	2571P1103T	25.40	30.44
12	2571P1203T	27.94	32.98
13	2571P1303T	30.48	35.52
14	2571P1403T	33.02	38.06
15	2571P1503T	35.56	40.60

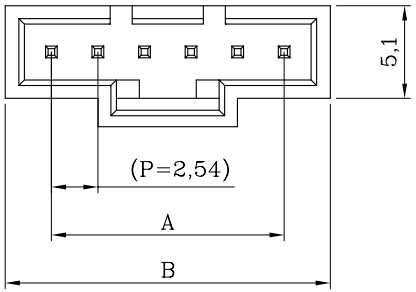

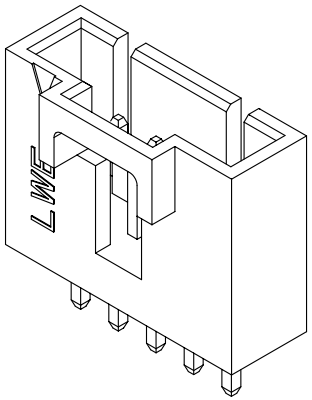

ISOMETRIC VIEW

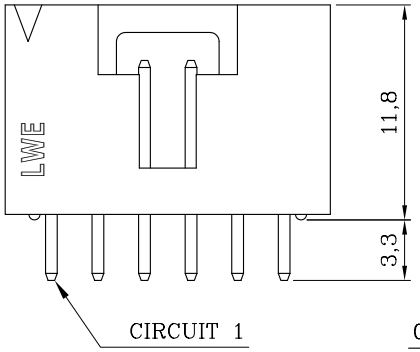

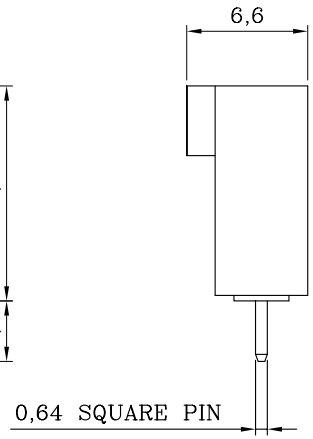

DESCRIPTION OF ORDER NO.:

2571P XX 0 3 X

- CIRCUITS NO. — XX
- TYPE NO. — 0
- MATERIAL NO. — 3
- PLATING NO. — X

3= PBT PLASTICS

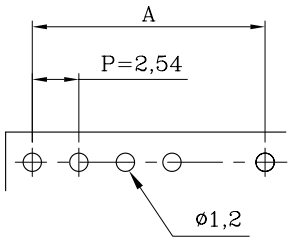

P.C. BOARD LAYOUT
(COMPONENT SIDE)

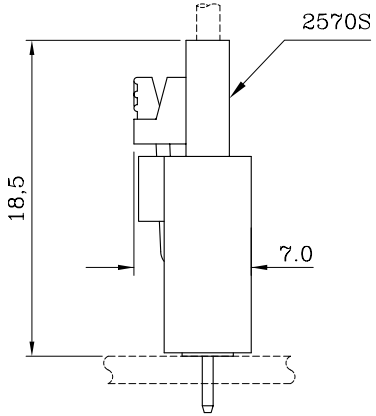

ASSEMBLY LAYOUT

NOTES:

1. MATERIAL:
   BASE: GLASS-FILLED PBT PLASTICS 94V-0, BLACK COLOR
   CONTACT PIN: BRASS
2. MATES WITH 2570S SINGLE-ROW SERIES PLUG HOUSING.
3. DESCRIPTION OF COLOR CODE:
   LEGEND: 2571PXX03X-X (-X: COLOR CODE)
   B=BLACK, C=COCONUT BROWN, E=BLUE, H=GRAY,
   I=BRICK RED, M=GREEN, R=RED, W=BROWN
4. REPLACEMENT OF HALOGEN-FREE PRODUCT:
   LEGEND: 2571PXX03X-XNH (NH: HALOGEN-FREE)
   LEGEND: 2571PXX03X-BNH (B=BLACK COLOR)
5. INFORMATION IN THIS DRAWING IS NOT CONSIDERED AS FINAL.

DESCRIPTION OF PLATING CODE:	
T= TIN-PLATED (T/P)	1= GOLD FLASH-PLATED
V= MATTE TIN-PLATED	

RoHS Compliant REACH Compliant

Sales Drawing

MATERIAL: SEE NOTES
FINISH(COLOR): SEE NOTES

LANDWIN 聯盈電子股份有限公司
LANDWIN ELECTRONIC CORP.

GENERAL TOLERANCE:	PROJECTION	SCALE	UNIT	SHEET NO.	REV
		FREE	MM	1 / 1	W1

DRAWN R.G.
CHECKED J.L.Lin
APPD H.Y.Lin
DATE 31-DEC-14'
ANGULAR ±3°

DRAW NO. (CQ) 2571PXX03X

TITLE: 2.54 PITCH SINGLE-ROW STRAIGHT DIP-HEADER

REV.	REVISION RECORD	DATE
W1	NEW RELEASE	31-DEC-14'

THIS DRAWING CONTAINS INFORMATION THAT IS PROPRIETARY TO LANDWIN ELECTRONIC CORP. SHOULD NOT BE USED WITHOUT WRITTEN PERMISSION.