ORDER INFORMATION AND DIMENSION:

Circuits	Part No. (Black color, T/P)	Dimension A	Dimension B
2	2582P02A3T	2.54	8.81
3	2582P03A3T	5.08	11.35
4	2582P04A3T	7.62	13.89
5	2582P05A3T	10.16	16.43
6	2582P06A3T	12.70	18.97
7	2582P07A3T	15.24	21.51
8	2582P08A3T	17.78	24.05
9	2582P09A3T	20.32	26.59
10	2582P10A3T	22.86	29.13
11	2582P11A3T	25.40	31.67
12	2582P12A3T	27.94	34.21
13	2582P13A3T	30.48	36.75
14	2582P14A3T	33.02	39.29
15	2582P15A3T	35.56	41.83

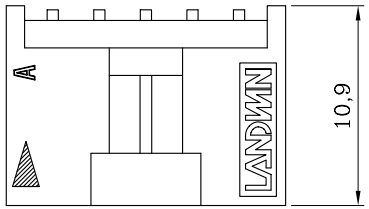

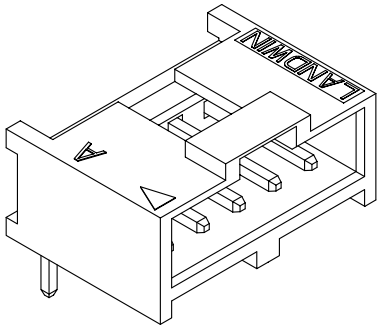

ISOMETRIC VIEW

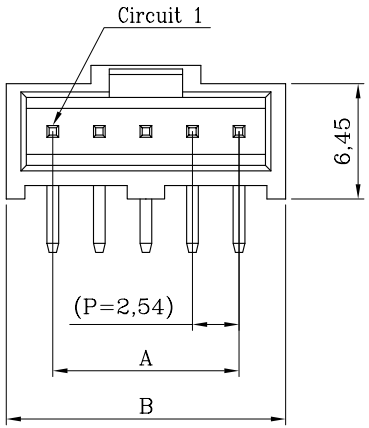

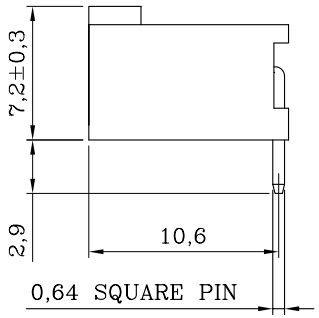

DESCRIPTION OF ORDER NO.:

2582P XX A 3 X

- CIRCUITS NO. — XX
- TYPE NO. — A
- MATERIAL NO. — 3
- PLATING NO. — X

3= PBT PLASTICS

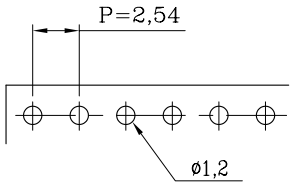

P.C. BOARD LAYOUT
(COMPONENT SIDE)

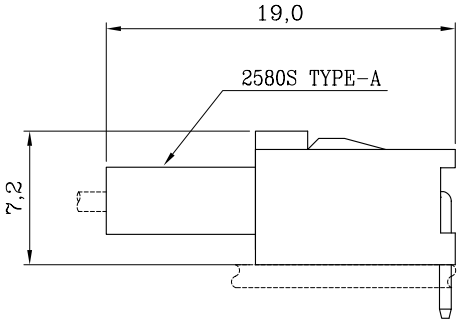

ASSEMBLY LAYOUT

NOTES:

1. MATERIAL:
   BASE: PBT-GF 94V-0, BLACK COLOR
   CONTACT PIN: BRASS
2. MATES WITH 2580S TYPE-A SINGLE-ROW SERIES PLUG HOUSING.
3. DESCRIPTION OF COLOR CODE:
   LEGEND: 2582PXXA3X-X (-X: COLOR CODE)
   C=COCONUT BROWN, E=BLUE, H=GRAY,
   I=BRICK RED, M=GREEN, R=RED, W=BROWN, S=WHITE
4. REPLACEMENT OF HALOGEN-FREE PRODUCT:
   LEGEND: 2582PXXA3X-XNH (NH: HALOGEN-FREE)
   LEGEND: 2582PXXA3X-BNH (B=BLACK COLOR)

DESCRIPTION OF PLATING CODE:	
T= TIN-PLATED (T/P)	1= GOLD FLASH-PLATED
V= MATTE TIN-PLATED	

REV.	REVISION RECORD	DATE
W1	NEW RELEASE	31-DEC-14'

MATERIAL: SEE NOTES
FINISH(COLOR): SEE NOTES

RoHS Compliant REACH Compliant

Sales Drawing

LANDWIN 聯盈電子股份有限公司
LANDWIN ELECTRONIC CORP.

GENERAL TOLERANCE:	PROJECTION	SCALE	UNIT	SHEET NO.	REV
ANGULAR ±3°		FREE	MM	1 / 1	W1

DRAWN R.G.
CHECKED J.L.Lin
APPD H.Y.Lin
DATE 31-DEC-14'

DRAW NO. (CQ) 2582PXXA3X

TITLE: 2.54 PITCH SINGLE-ROW RIGHT-ANGLE DIP-HEADER

THIS DRAWING CONTAINS INFORMATION THAT IS PROPRIETARY TO LANDWIN ELECTRONIC CORP. SHOULD NOT BE USED WITHOUT WRITTEN PERMISSION.