ORDER INFORMATION AND DIMENSION:

Circuits	Part No. (Black color, T/P)	Dimension A	Dimension B
6	2582P0603T	5.08	10.16
8	2582P0803T	7.62	12.70
10	2582P1003T	10.16	15.24
12	2582P1203T	12.70	17.78
14	2582P1403T	15.24	20.32
16	2582P1603T	17.78	22.86
18	2582P1803T	20.32	25.40
20	2582P2003T	22.86	27.94
22	2582P2203T	25.40	30.48
24	2582P2403T	27.94	33.02
26	2582P2603T	30.48	35.56
28	2582P2803T	33.02	38.10
30	2582P3003T	35.56	40.64
32	2582P3203T	38.10	43.18
34	2582P3403T	40.64	45.72
36	2582P3603T	43.18	48.26
38	2582P3803T	45.72	50.80
40	2582P4003T	48.26	53.34

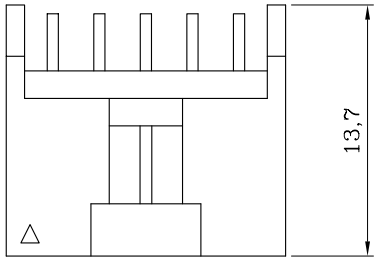

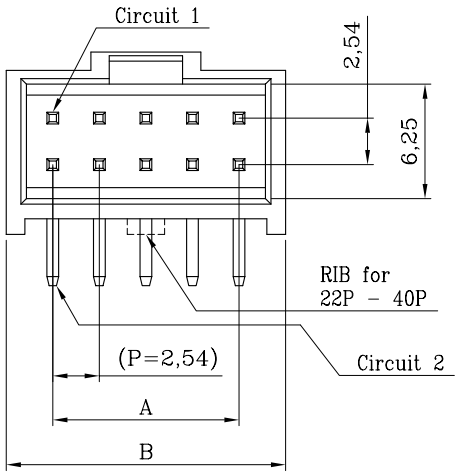

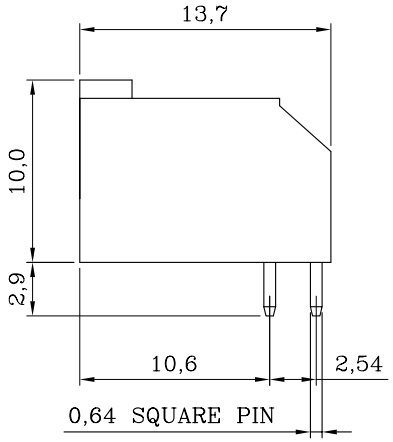

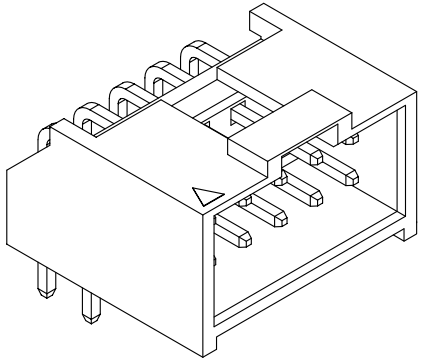

ISOMETRIC VIEW

DESCRIPTION OF ORDER NO.:

2582P XX 0 3 X

- CIRCUITS NO. — XX
- TYPE NO. — 0
- MATERIAL NO. — 3
- PLATING NO. — X

3= PBT PLASTICS

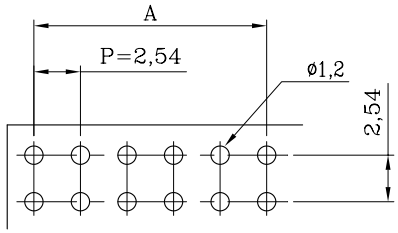

P.C. BOARD LAYOUT (COMPONENT SIDE)

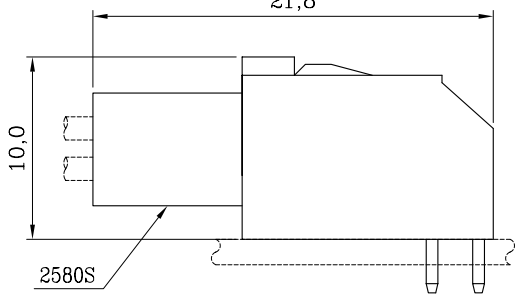

ASSEMBLY LAYOUT

NOTES:

1. MATERIAL: BASE: PBT–GF 94V–0, BLACK COLOR
   CONTACT PIN: BRASS
2. MATES WITH 2580S DUAL–ROW SERIES PLUG HOUSING.
3. DESCRIPTION OF COLOR CODE:
   LEGEND: 2582PXX03X–X (–X: COLOR CODE)
   C=COCONUT BROWN, E=BLUE, H=GRAY,
   I=BRICK RED, M=GREEN, R=RED, W=BROWN, S=WHITE
4. REPLACEMENT OF HALOGEN–FREE PRODUCT:
   LEGEND: 2582PXX03X–XNH (NH: HALOGEN–FREE)
   LEGEND: 2582PXX03X–BNH (B=BLACK COLOR)
5. INFORMATION IN THIS DRAWING IS NOT CONSIDERED AS FINAL.

DESCRIPTION OF PLATING CODE:	
T= TIN–PLATED (T/P)	1= GOLD FLASH–PLATED
V= MATTE TIN–PLATED	

MATERIAL: SEE NOTES		
FINISH(COLOR): SEE NOTES		
W1	NEW RELEASE	31-DEC-14'
REV.	REVISION RECORD	DATE

RoHS Compliant REACH Compliant

Sales Drawing

LANDWIN 聯盈電子股份有限公司
LANDWIN ELECTRONIC CORP.

GENERAL TOLERANCE:	PROJECTION	SCALE	UNIT	SHEET NO.	REV
ANGULAR ±3°		FREE	MM	1 / 1	W1

DRAWN R.G.
CHECKED J.L.Lin
APPD H.Y.Lin
DATE 31-DEC-14'

DRAW NO. (CQ) 2582PXX03X

TITLE: 2.54 PITCH DUAL–ROW RIGHT–ANGLE DIP–HEADER

THIS DRAWING CONTAINS INFORMATION THAT IS PROPRIETARY TO LANDWIN ELECTRONIC CORP. SHOULD NOT BE USED WITHOUT WRITTEN PERMISSION.