ORDER INFORMATION AND DIMENSION:

Circuits	Part No. (Natural color, T/P)	Dimension A	Dimension B
2	2632P02A3T	2.54	5.08
3	2632P03A3T	5.08	7.62
4	2632P04A3T	7.62	10.16
5	2632P05A3T	10.16	12.70
6	2632P06A3T	12.70	15.24
7	2632P07A3T	15.24	17.78
8	2632P08A3T	17.78	20.32
9	2632P09A3T	20.32	22.86
10	2632P10A3T	22.86	25.40
11	2632P11A3T	25.40	27.94
12	2632P12A3T	27.94	30.48
13	2632P13A3T	30.48	33.02
14	2632P14A3T	33.02	35.56
15	2632P15A3T	35.56	38.10

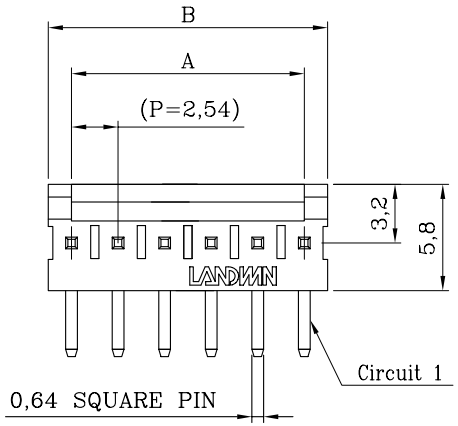

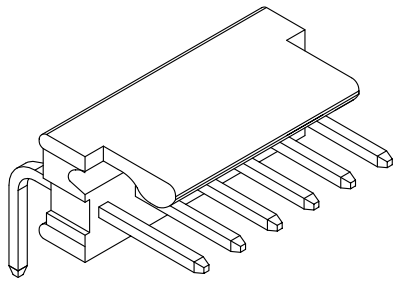

ISOMETRIC VIEW

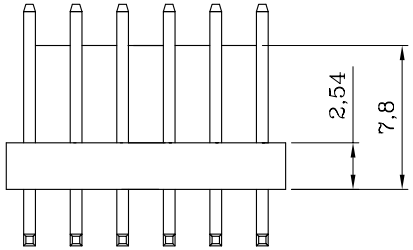

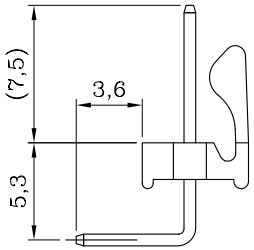

DESCRIPTION OF ORDER NO.:

2632P XX A 3 X

- CIRCUITS NO. — XX
- TYPE NO. — A
- MATERIAL NO. — 3
- PLATING NO. — X

3= PBT PLASTICS

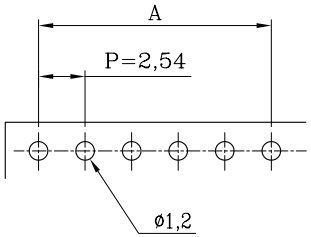

P.C. BOARD LAYOUT
(COMPONENT SIDE)

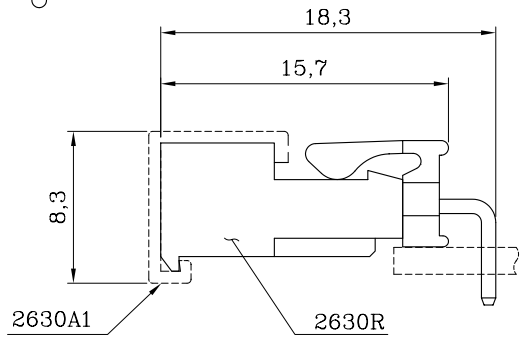

ASSEMBLY LAYOUT

NOTES:

1. MATERIAL:
   BASE: PBT-GF 94V-0, WHITE COLOR (NATURAL)
   CONTACT PIN: BRASS
2. MATES WITH 2630RXX22X-1X SERIES IDC PLUG HOUSING.
3. DESCRIPTION OF COLOR CODE:
   LEGEND: 2632PXXA3X-X (-X: COLOR CODE)
   B=BLACK, C=COCONUT BROWN, E=BLUE, H=GRAY,
   I=BRICK RED, M=GREEN, R=RED, W=BROWN
4. REPLACEMENT OF HALOGEN-FREE PRODUCT:
   LEGEND: 2632PXXA3X-XNH (NH: HALOGEN-FREE)
   LEGEND: 2632PXXA3X-SNH (S=NATURAL COLOR)
5. INFORMATION IN THIS DRAWING IS NOT CONSIDERED AS FINAL.

DESCRIPTION OF PLATING CODE:	
T= TIN-PLATED (T/P)	1= GOLD FLASH-PLATED
V= MATTE TIN-PLATED	

REV.	REVISION RECORD	DATE
W1	NEW RELEASE	31-DEC-14'

MATERIAL: SEE NOTES
FINISH(COLOR): SEE NOTES

RoHS Compliant REACH Compliant

Sales Drawing

LANDWIN 聯盈電子股份有限公司
LANDWIN ELECTRONIC CORP.

GENERAL TOLERANCE:	PROJECTION	SCALE	UNIT	SHEET NO.	REV
ANGULAR ±3°		FREE	MM	1 / 1	W1

DRAWN R.G.
CHECKED J.L.Lin
APPD H.Y.Lin
DATE 31-DEC-14'

DRAW NO. (CQ) 2632PXXA3X

TITLE: 2.54 PITCH SINGLE-ROW R/A DIP-HEADER (TYPE-A)

THIS DRAWING CONTAINS INFORMATION THAT IS PROPRIETARY TO LANDWIN ELECTRONIC CORP. SHOULD NOT BE USED WITHOUT WRITTEN PERMISSION.