ORDER INFORMATION AND DIMENSION:

Circuits	Part No.	Dimension	
		A	B
2	2060S02 00	2.0	7.0
3	2060S03 00	4.0	9.0
4	2060S04 00	6.0	11.0
5	2060S05 00	8.0	13.0
6	2060S06 00	10.0	15.0
7	2060S07 00	12.0	17.0
8	2060S08 00	14.0	19.0
9	2060S09 00	16.0	21.0
10	2060S10 00	18.0	23.0
11	2060S11 00	20.0	25.0
12	2060S12 00	22.0	27.0
13	2060S13 00	24.0	29.0
14	2060S14 00	26.0	31.0
15	2060S15 00	28.0	33.0

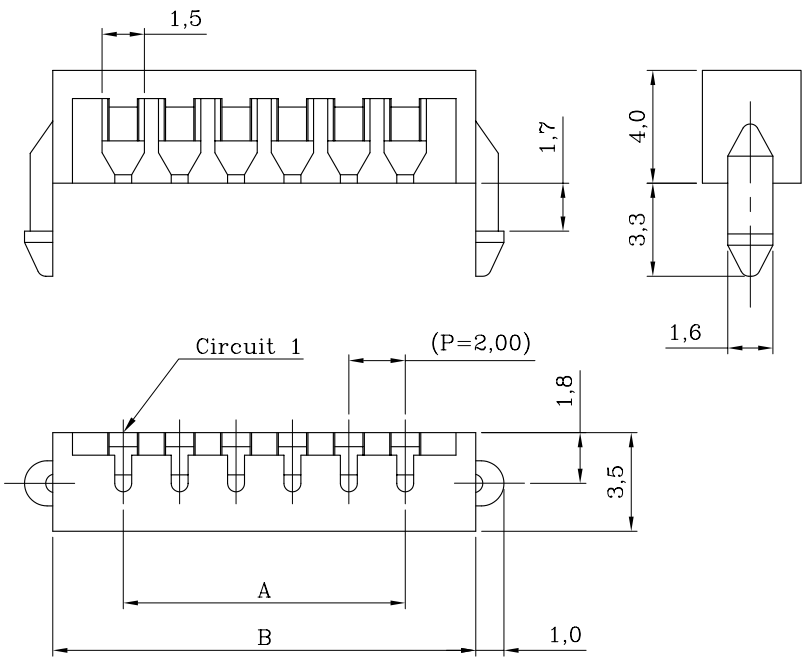

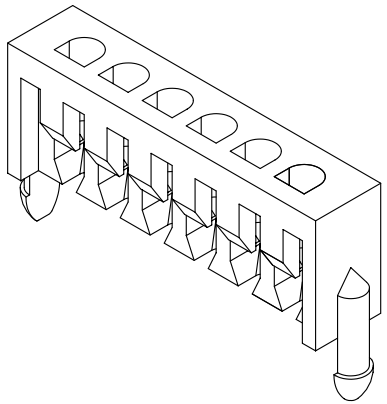

ISOMETRIC VIEW

DESCRIPTION OF ORDER NO.:

2060S XX 0 0

CIRCUITS NO.

TYPE NO.

MATERIAL NO.

0= NYLON66 94V-0 PLASTICS

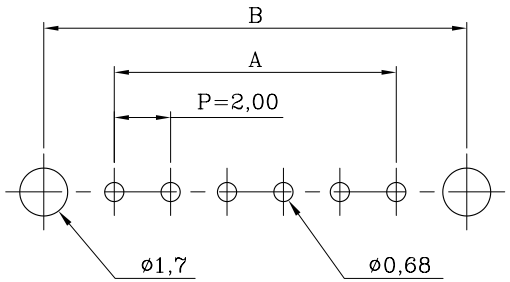

P.C. BOARD LAYOUT

DISCREET WIRE FLAT CABLE RIBBON CABLE

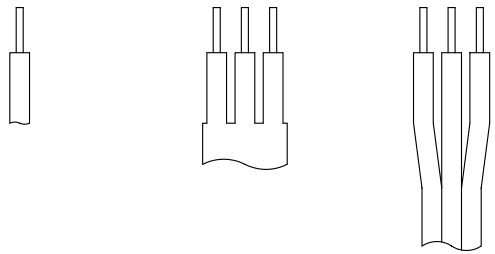

NOTES:

1. MATERIAL:
   BASE: NYLON66 94V-0, WHITE COLOR (NATURAL)
2. USE WITH 2.0 mm PITCH RIBBON CABLE.
3. DESCRIPTION OF COLOR CODE:
   LEGEND: 2060SXX00-X (-X: COLOR CODE)
   B=BLACK, C=COCONUT BROWN, D=ORANGE, E=BLUE, H=GRAY,
   I=BRICK RED, K=PURPLE, L=LEMON YELLOW, M=GREEN,
   P=PINK, R=RED, V=LAVENDER, W=BROWN, Y=YELLOW
5. INFORMATION IN THIS DRAWING IS NOT CONSIDERED AS FINAL.

RoHS Compliant REACH Compliant

Sales Drawing

MATERIAL: SEE NOTES
FINISH(COLOR): SEE NOTES

LANDWIN 聯盈電子股份有限公司 LANDWIN ELECTRONIC CORP.

GENERAL TOLERANCE:	PROJECTION	SCALE	UNIT	SHEET NO.	REV
		FREE	MM	1 / 1	W1

DRAWN R.G.
CHECKED J.L.Lin
APPD H.Y.Lin
DATE 31-DEC-14'
ANGULAR ±3°

DRAW NO. (AQ) 2060SXX00

TITLE: 2.00 PITCH SINGLE-ROW RIBBON CABLE HOLDER

REV.	REVISION RECORD	DATE
W1	NEW RELEASE	31-DEC-14'

THIS DRAWING CONTAINS INFORMATION THAT IS PROPRIETARY TO LANDWIN ELECTRONIC CORP. SHOULD NOT BE USED WITHOUT WRITTEN PERMISSION.