ORDER INFORMATION AND DIMENSION:

Circuits	Part No.	Dimension	
		A	B
2	2650S0200	2.5	7.5
3	2650S0300	5.0	10.0
4	2650S0400	7.5	12.5
5	2650S0500	10.0	15.0
6	2650S0600	12.5	17.5
7	2650S0700	15.0	20.0
8	2650S0800	17.5	22.5
9	2650S0900	20.0	25.0
10	2650S1000	22.5	27.5
11	2650S1100	25.0	30.0
12	2650S1200	27.5	32.5
13	2650S1300	30.0	35.0
14	2650S1400	32.5	37.5
15	2650S1500	35.0	40.0
16	2650S1600	37.5	42.5

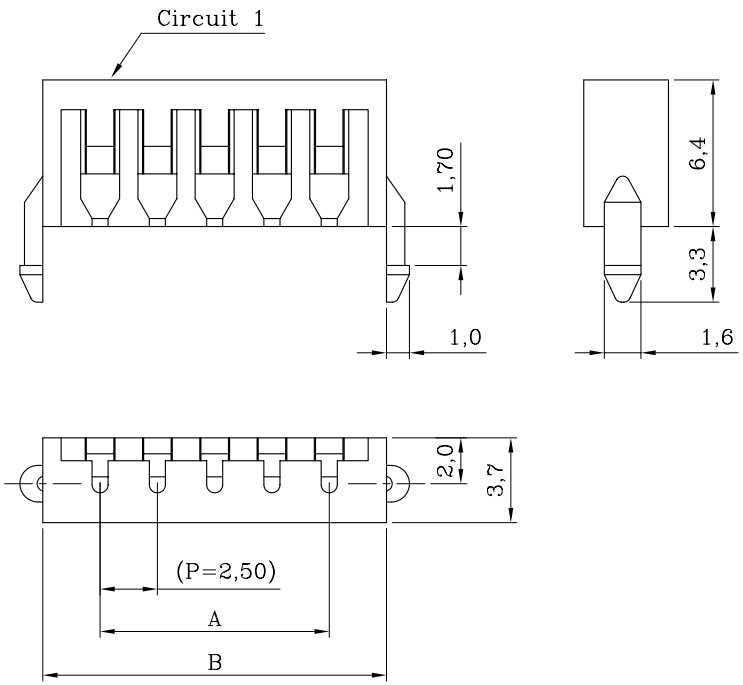

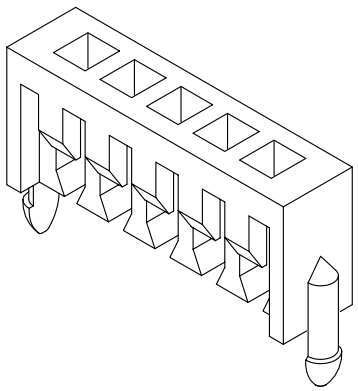

ISOMETRIC VIEW

DESCRIPTION OF ORDER NO.:

2650S XX 0 0

CIRCUITS NO.

TYPE NO.

MATERIAL NO.

0= NYLON66 94V-0 PLASTICS

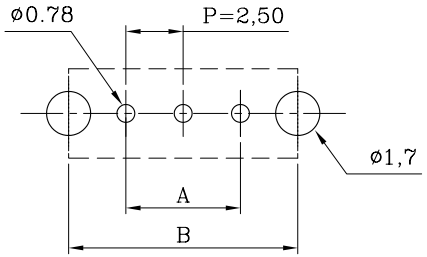

P.C. BOARD LAYOUT

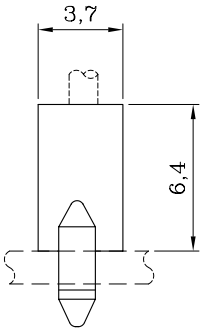

ASSEMBLY LAYOUT

NOTES:

1. MATERIAL:
   BASE: NYLON66 94V-0, WHITE COLOR (NATURAL)
2. USE WITH PITCH 2.50 mm/AWG24 TO AWG26 AWG RIBBON CABLE.
3. MATES WITH 1.50 mm THICKNESS P.C.B.
4. DESCRIPTION OF COLOR CODE:
   LEGEND: 2650SXX00-X (-X: COLOR CODE)
   B=BLACK, C=COCONUT BROWN, D=ORANGE, E=BLUE, H=GRAY,
   I=BRICK RED, K=PURPLE, L=LEMON YELLOW, M=GREEN,
   P=PINK, R=RED, V=LAVENDER, W=BROWN, Y=YELLOW
5. INFORMATION IN THIS DRAWING IS NOT CONSIDERED AS FINAL.

RoHS Compliant REACH Compliant

Sales Drawing

MATERIAL: SEE NOTES
FINISH(COLOR): SEE NOTES

LANDWIN 聯盈電子股份有限公司 LANDWIN ELECTRONIC CORP.

GENERAL TOLERANCE:	PROJECTION	SCALE	UNIT	SHEET NO.	REV
		FREE	MM	1 / 1	W1

DRAWN R.G.
CHECKED J.L.Lin
APPD H.Y.Lin
DATE 31-DEC-14'
ANGULAR ±3°

DRAW NO. (AQ) 2650SXX00

TITLE: 2.50 PITCH SINGLE-ROW RIBBON CABLE HOLDER

REV.	REVISION RECORD	DATE
W1	NEW RELEASE	31-DEC-14'

THIS DRAWING CONTAINS INFORMATION THAT IS PROPRIETARY TO LANDWIN ELECTRONIC CORP. SHOULD NOT BE USED WITHOUT WRITTEN PERMISSION.