ORDER INFORMATION AND DIMENSION:

Circuits	Part No. (Tin-Plated)	Dimension A	Dimension B
2	2031P0203T	2.0	7.0
3	2031P0303T	4.0	9.0
4	2031P0403T	6.0	11.0
5	2031P0503T	8.0	13.0
6	2031P0603T	10.0	15.0
7	2031P0703T	12.0	17.0
8	2031P0803T	14.0	19.0
9	2031P0903T	16.0	21.0
10	2031P1003T	18.0	23.0
11	2031P1103T	20.0	25.0
12	2031P1203T	22.0	27.0
13	2031P1303T	24.0	29.0
14	2031P1403T	26.0	31.0
15	2031P1503T	28.0	33.0
16	2031P1603T	30.0	35.0
17	2031P1703T	32.0	37.0
18	2031P1803T	34.0	39.0
19	2031P1903T	36.0	41.0
20	2031P2003T	38.0	43.0

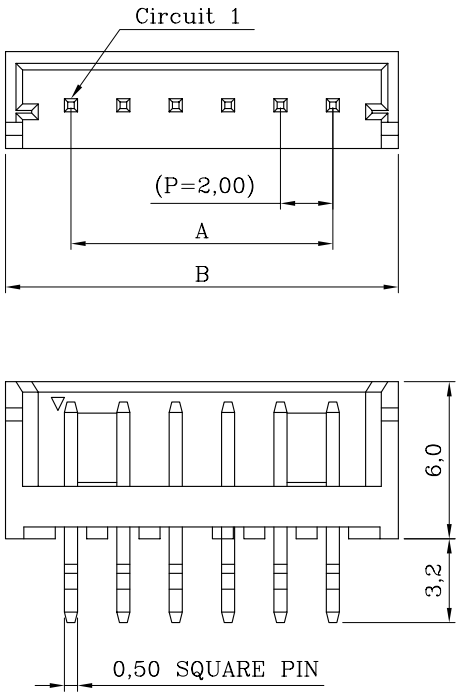

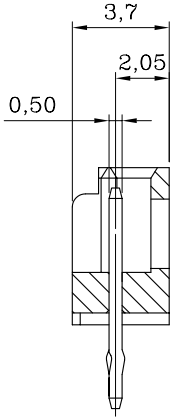

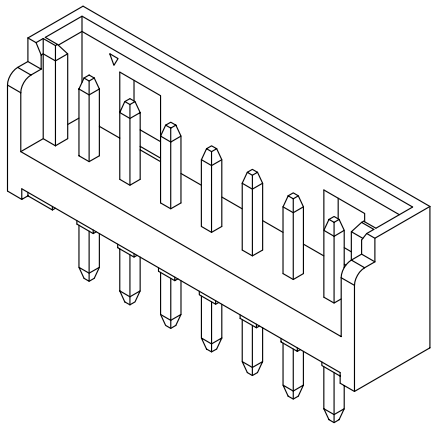

ISOMETRIC VIEW

DESCRIPTION OF ORDER NO.:

2031P XX 0 3 X

- CIRCUITS NO.
- TYPE NO.
- MATERIAL NO.
- PLATING NO.

3= PBT PLASTICS

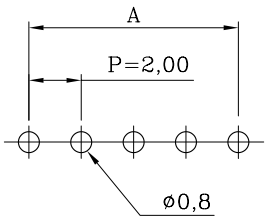

P.C. BOARD LAYOUT

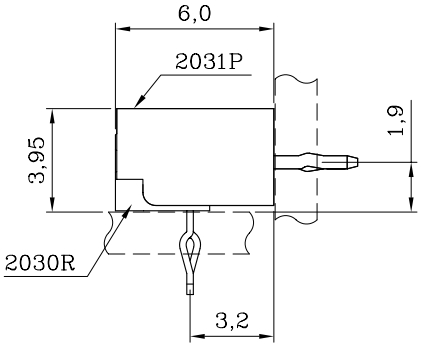

ASSEMBLY LAYOUT

NOTES:

1. MATERIAL:
   BASE: GLASS-FILLED P.B.T. 94V-0, WHITE COLOR (NATURAL)
   CONTACT PIN: BRASS
2. MATES WITH 2030R BOARD-TO-BOARD PLUG CONN..
3. DESCRIPTION OF COLOR CODE:
   LEGEND: 2031PXX03X-X (-X: COLOR CODE)
   B=BLACK, C=COCONUT BROWN, E=BLUE, H=GRAY,
   I=BRICK RED, M=GREEN, R=RED, W=BROWN
4. REPLACEMENT OF HALOGEN-FREE PRODUCT:
   LEGEND: 2031PXX03X-XNH (NH: HALOGEN-FREE)
   LEGEND: 2031PXX03X-SNH (S=WHITE COLOR/NATURAL)
5. INFORMATION IN THIS DRAWING IS NOT CONSIDERED AS FINAL.

DESCRIPTION OF PLATING CODE			
T	TIN-PLATED	1	GOLD FLASH-PLATED

REV.	REVISION RECORD	DATE
W1	NEW RELEASE	31-DEC-14'

MATERIAL: SEE NOTES
FINISH(COLOR): SEE NOTES

RoHS Compliant REACH Compliant

Sales Drawing

LANDWIN 聯盈電子股份有限公司
LANDWIN ELECTRONIC CORP.

GENERAL TOLERANCE:	PROJECTION	SCALE	UNIT	SHEET NO.	REV
		FREE	MM	1 / 1	W1

DRAWN R.G.
CHECKED J.L.Lin
APPD H.Y.Lin
DATE 31-DEC-14'
ANGULAR ±3°

DRAW NO. (CQ) 2031PXX03X

TITLE: 2.00 PITCH SINGLE-ROW Board-to-Board DIP-HEADER

THIS DRAWING CONTAINS INFORMATION THAT IS PROPRIETARY TO LANDWIN ELECTRONIC CORP. SHOULD NOT BE USED WITHOUT WRITTEN PERMISSION.