ORDER INFORMATION AND DIMENSION:

Circuits	Part No.		Dimension	
	PA66 94V-0 Light Ivory Color	PA66-GF 94V-0 Light Ivory Color	A	B
1	4500A0100-A	4500A0101-A	n/a	3.85
2	4500A0200-A	4500A0201-A	4.5	8.3
3	4500A0300-A	4500A0301-A	9.0	12.8

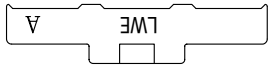

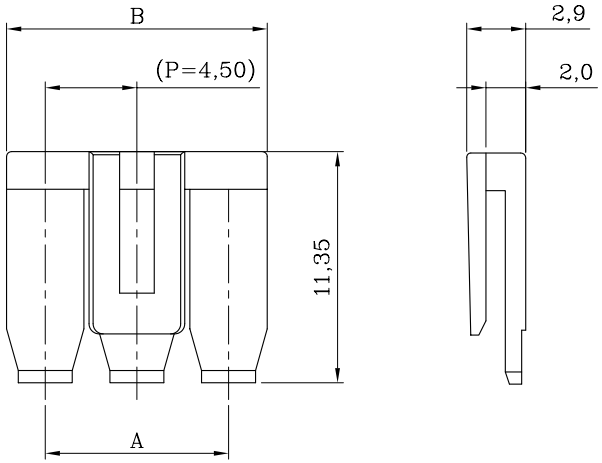

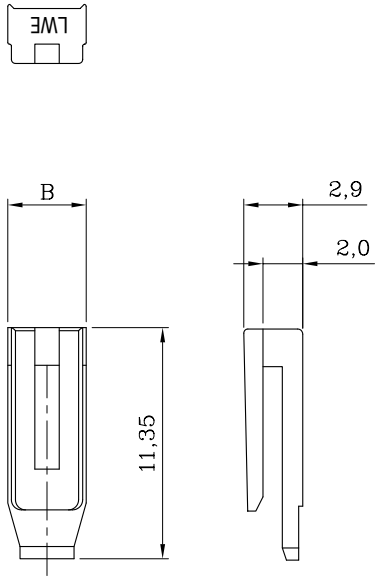

DESCRIPTION OF ORDER NO.:

4500A XX 0 0 - X

- CIRCUITS NO.
- TYPE NO.
- MATERIAL NO.
  - 0= PA66 94V-0 PLASTICS
- COLOR NO.
  - A= LIGHT IVORY COLOR

DESCRIPTION OF ORDER NO.:

4500A XX 0 1 - X

- CIRCUITS NO.
- TYPE NO.
- MATERIAL NO.
  - 1= PA66-GF 94V-0 PLASTICS
- COLOR NO.
  - A= LIGHT IVORY COLOR

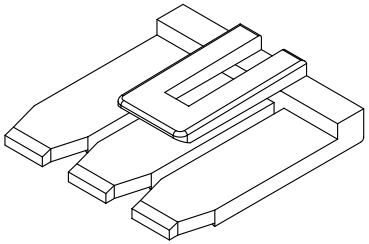

ISOMETRIC VIEW

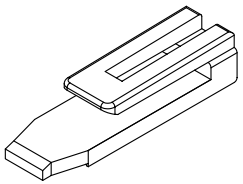

ISOMETRIC VIEW
(1 CIRCUIT)

NOTES:

1. MATERIAL:
   BASE (NO.= 0): PA66 94V-0
   BASE (NO.= 1): PA66-GF 94V-0
2. MATES WITH 4500F SERIES PLUG HOUSING.
3. MATES WITH 4500M SERIES RECEPTACLE HOUSING.
4. DESCRIPTION OF COLOR NO.:
   LEGEND: 4500AXX00-X (-X: COLOR NO.)
   LEGEND: 4500AXX01-X (-X: COLOR NO.)
   B=BLACK, E=BLUE, H=GRAY, I=BRICK RED,
   R=RED, W=BROWN, S= WHITE (NATURAL COLOR)
5. INFORMATION IN THIS DRAWING IS NOT CONSIDERED AS FINAL.

MATERIAL: SEE NOTES		
FINISH(COLOR): LIGHT IVORY (NATURAL)		
W1	NEW RELEASE	31-DEC-14'
REV.	REVISION RECORD	DATE

RoHS Compliant REACH Compliant

Sales Drawing

LANDWIN 聯盈電子股份有限公司
LANDWIN ELECTRONIC CORP.

GENERAL TOLERANCE:	PROJECTION	SCALE	UNIT	SHEET NO.	REV
		FREE	MM	1 / 1	W1

DRAWN R.G.
CHECKED J.L.Lin
APPD H.Y.Lin
DATE 31-DEC-14'
ANGULAR ±3°

DRAW NO. (AQ) 4500AXX0X-X

TITLE: 4.50 PITCH(4500 SERIES) CABLE RETAINER

THIS DRAWING CONTAINS INFORMATION THAT IS PROPRIETARY TO LANDWIN ELECTRONIC CORP. SHOULD NOT BE USED WITHOUT WRITTEN PERMISSION.