ORDER INFORMATION AND DIMENSION:

Circuits	Part No. (Reflow tin, Ivory color)	Dimension A	Dimension B
2	2002P02 B4T	2.0	8.0
3	2002P03 B4T	4.0	10.0
4	2002P04 B4T	6.0	12.0
5	2002P05 B4T	8.0	14.0
6	2002P06 B4T	10.0	16.0
7	2002P07 B4T	12.0	18.0
8	2002P08 B4T	14.0	20.0
9	2002P09 B4T	16.0	22.0
10	2002P10 B4T	18.0	24.0
11	2002P11 B4T	20.0	26.0
12	2002P11 B4T	22.0	28.0
13	2002P13 B4T	24.0	30.0
14	2002P14 B4T	26.0	32.0
15	2002P15 B4T	28.0	34.0

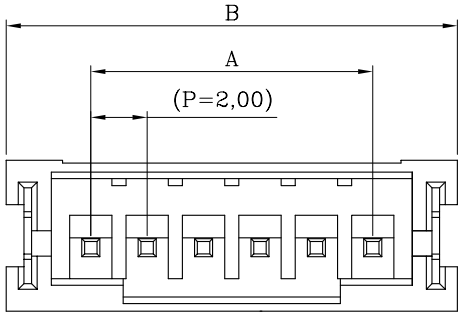

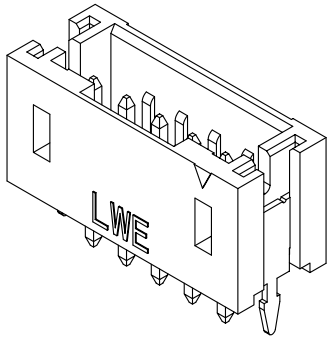

ISOMETRIC VIEW

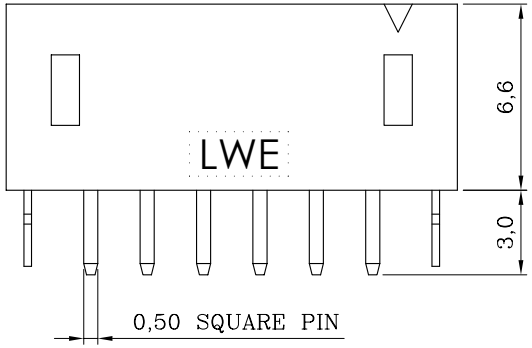

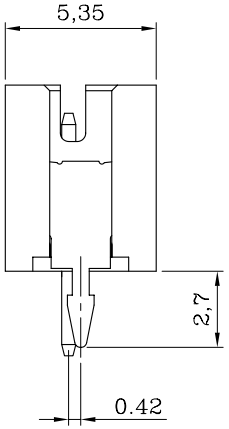

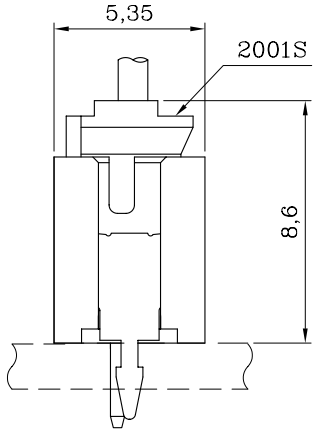

ASSEMBLY LAYOUT

DESCRIPTION OF ORDER NO.:

2002P XX B 4 X

- CIRCUITS NO. — XX
- TYPE NO. — B
- PLATING NO. — X

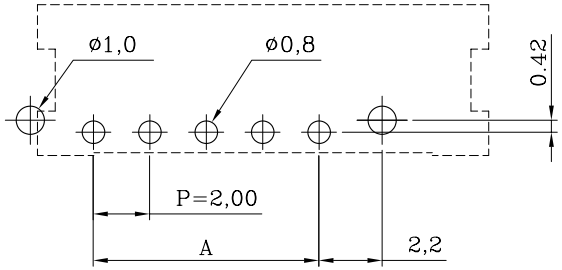

P.C. BOARD LAYOUT

NOTES:

1. MATERIAL:
   BASE: HIGH HDT NYLON 94V-0, IVORY COLOR (NATURAL)
   CONTACT PIN: BRASS
2. MATES WITH 2001S SINGLE-ROW SERIES PLUG HOUSING.
3. DESCRIPTION OF COLOR CODE:
   LEGEND: 2002PXXB4X-X (-X: COLOR CODE)
   B=BLACK, C=COCONUT BROWN, E=BLUE, H=GRAY,
   I=BRICK RED, M=GREEN, R=RED, W=BROWN
4. REPLACEMENT OF HALOGEN-FREE PRODUCT:
   LEGEND: 2002PXXB4X-XNH (NH: HALOGEN-FREE)
   LEGEND: 2002PXXB4X-SNH (S=NATURAL COLOR)
5. INFORMATION IN THIS DRAWING IS NOT CONSIDERED AS FINAL.

DESCRIPTION OF PLATING CODE			
T	REFLOW TIN-PLATED	1	GOLD FLASH-PLATED

REV.	REVISION RECORD	DATE
W1	NEW RELEASE	31-DEC-14'

MATERIAL: SEE NOTES
FINISH(COLOR): SEE NOTES

RoHS Compliant REACH Compliant

Sales Drawing

LANDWIN 聯盈電子股份有限公司 LANDWIN ELECTRONIC CORP.

GENERAL TOLERANCE:	PROJECTION	SCALE	UNIT	SHEET NO.	REV
ANGULAR ±3°		FREE	MM	1 / 1	W1

DRAWN R.G.
CHECKED J.L.Lin
APPD H.Y.Lin
DATE 31-DEC-14'

DRAW NO. (CQ) 2002PXXB4X

TITLE: 2.00 PITCH SINGLE-ROW STRAIGHT DIP-HEADER

THIS DRAWING CONTAINS INFORMATION THAT IS PROPRIETARY TO LANDWIN ELECTRONIC CORP. SHOULD NOT BE USED WITHOUT WRITTEN PERMISSION.