ORDER INFORMATION AND DIMENSION:

Circuits	Part No. (Reflow tin, Ivory color)	Dimension A	Dimension B
2	2003P02 SOT	2.0	8.0
3	2003P03 SOT	4.0	10.0
4	2003P04 SOT	6.0	12.0
5	2003P05 SOT	8.0	14.0
6	2003P06 SOT	10.0	16.0
7	2003P07 SOT	12.0	18.0
8	2003P08 SOT	14.0	20.0
9	2003P09 SOT	16.0	22.0
10	2003P10 SOT	18.0	24.0
11	2003P11 SOT	20.0	26.0
12	2003P12 SOT	22.0	28.0
13	2003P13 SOT	24.0	30.0
14	2003P14 SOT	26.0	32.0
15	2003P15 SOT	28.0	34.0

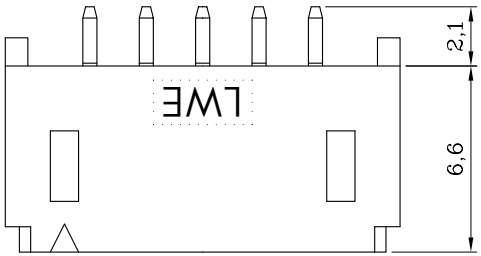

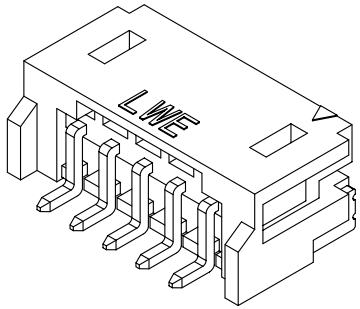

ISOMETRIC VIEW

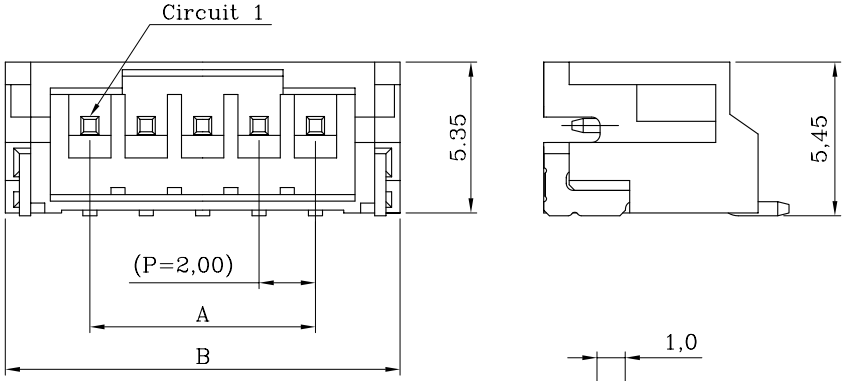

DESCRIPTION OF ORDER NO.:

2003P XX S 0 X

- CIRCUITS NO.
- TYPE NO.
- PLATING NO.

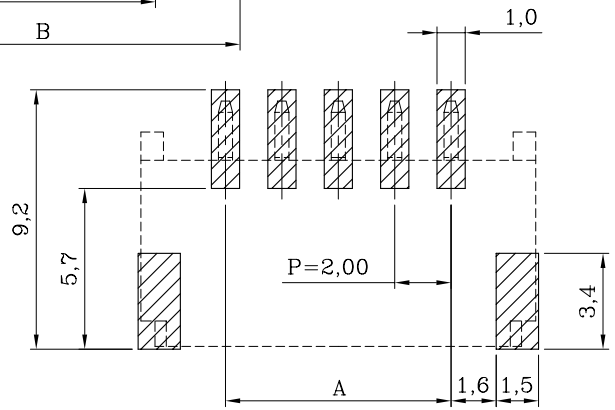

P.C. BOARD LAYOUT

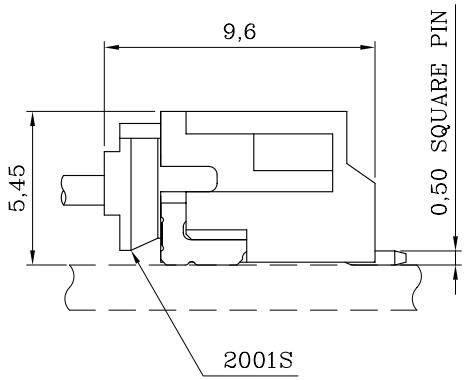

ASSEMBLY LAYOUT

NOTES:

1. MATERIAL:
   BASE: HIGH HDT NYLON 94V-0, IVORY COLOR (NATURAL)
   CONTACT PIN: BRASS
2. MATES WITH 2001S SINGLE-ROW SERIES PLUG HOUSING.
3. DESCRIPTION OF COLOR CODE:
   LEGEND: 2003PXXS0X-X (-X: COLOR CODE)
   B=BLACK, C=COCONUT BROWN, E=BLUE, H=GRAY,
   I=BRICK RED, M=GREEN, R=RED, W=BROWN
4. REPLACEMENT OF HALOGEN-FREE PRODUCT:
   LEGEND: 2003PXXS0X-XNH (NH: HALOGEN-FREE)
   LEGEND: 2003PXXS0X-SNH (S=NATURAL COLOR)
5. Q'ty per 330 mm Dia. Panel: 900 PCS/Embossed Tape Reel
6. INFORMATION IN THIS DRAWING IS NOT CONSIDERED AS FINAL.

DESCRIPTION OF PLATING CODE			
T	REFLOW TIN-PLATED	1	GOLD FLASH-PLATED

RoHS Compliant REACH Compliant

Sales Drawing

MATERIAL: SEE NOTES
FINISH(COLOR): SEE NOTES

LANDWIN 聯盈電子股份有限公司
LANDWIN ELECTRONIC CORP.

GENERAL TOLERANCE:	PROJECTION	SCALE	UNIT	SHEET NO.	REV
		FREE	MM	1 / 1	W1

DRAWN R.G.
CHECKED J.L.Lin
APPD H.Y.Lin
DATE 31-DEC-14'
ANGULAR ±3°

DRAW NO. (CQ) 2003PXXS0X

TITLE: 2.00 PITCH SINGLE-ROW RIGHT-ANGLE SMT-HEADER

REV.	REVISION RECORD	DATE
W1	NEW RELEASE	31-DEC-14'

THIS DRAWING CONTAINS INFORMATION THAT IS PROPRIETARY TO LANDWIN ELECTRONIC CORP. SHOULD NOT BE USED WITHOUT WRITTEN PERMISSION.